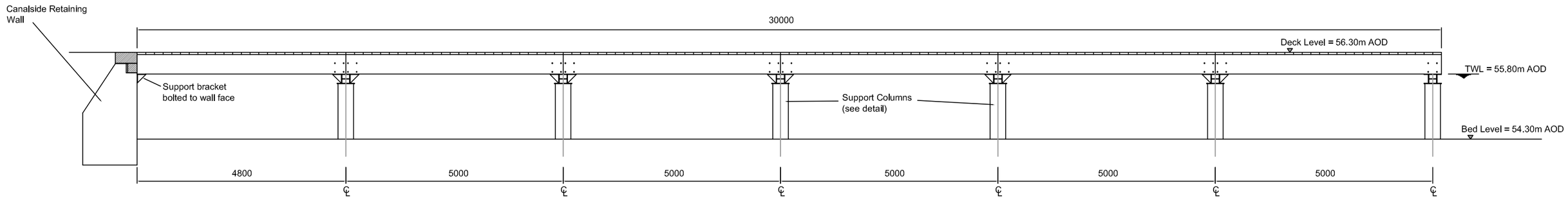

NOTE
Mooring rings to be provided at both ends of platform and on either side (ie 4no per platform)

ELEVATION ALONG MOORING PLATFORM

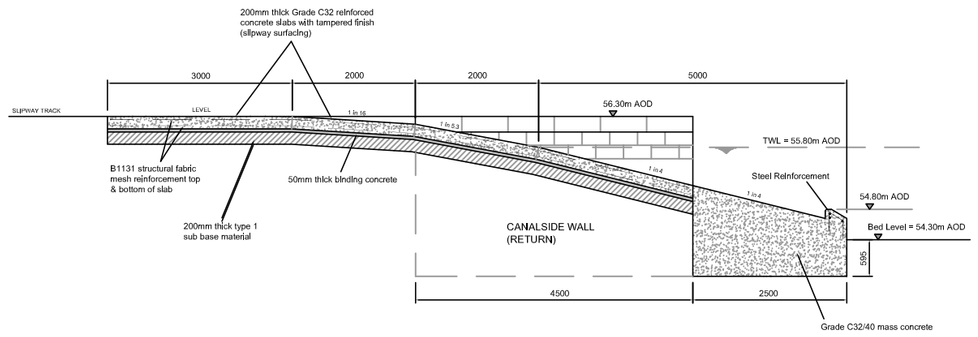

SECTION SHOWING SLIPWAY CONSTRUCTION

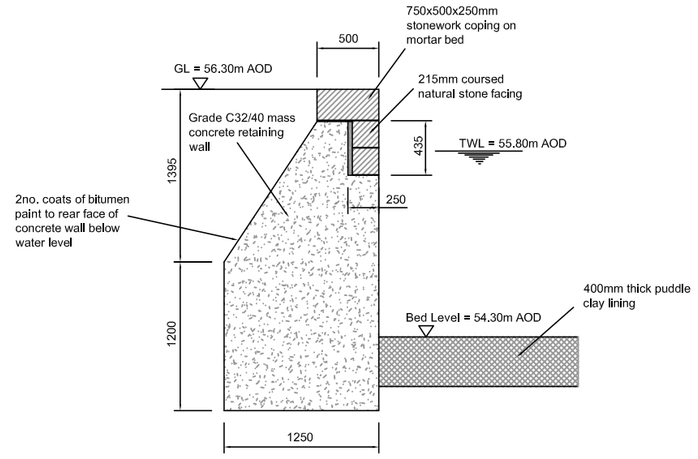

TYPICAL SECTION THROUGH CANALSIDE WALL

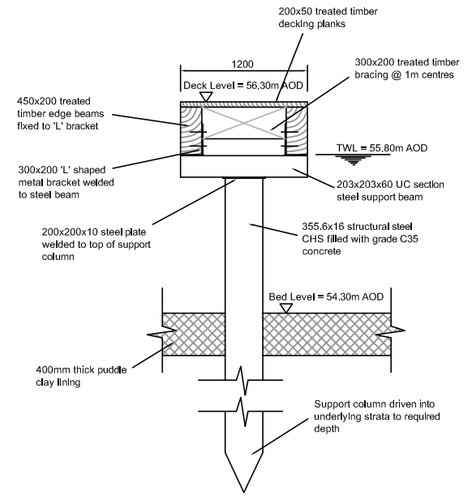

MOORING PLATFORM SUPPORT DETAIL

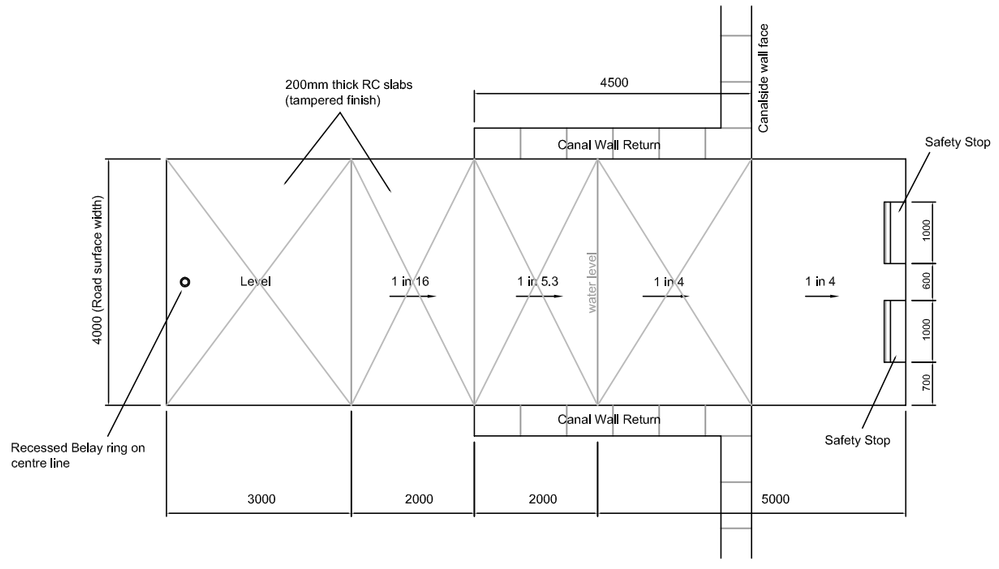

PLAN SHOWING SLIPWAY LAYOUT

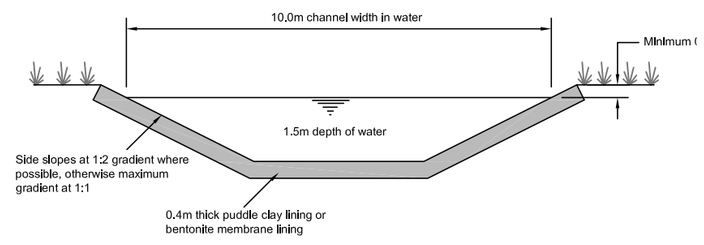

TYPICAL PROFILE THROUGH CANAL CHANNEL
(with soft edge banks)

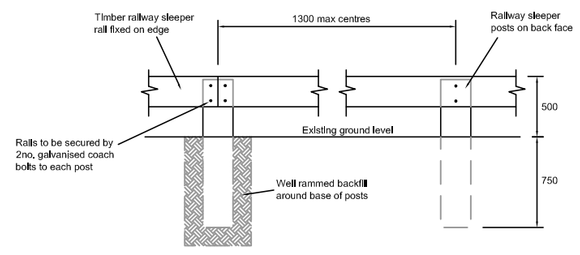

TIMBER SAFETY BARRIER DETAIL

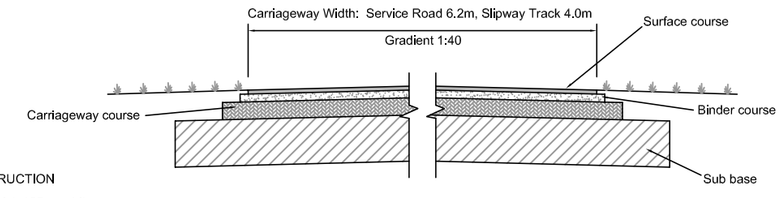

CARRIAGEWAY CONSTRUCTION

Surface Course - 30mm thick 125 pen bitumen grade binder (0/10mm aggregate)

Binder Course - 60mm thick 125 pen bitumen grade binder (0/20mm aggregate)

Carriageway Course - 130mm thick 125 pen bitumen grade binder (0/32mm aggregate)

Sub base Course - 350mm thick Type 1 material

TYPICAL SECTION THROUGH SERVICE ROAD & SLIPWAY TRACK

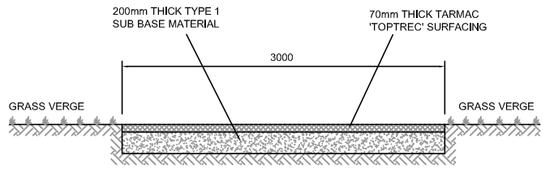

TYPICAL SECTION THROUGH TRAIL

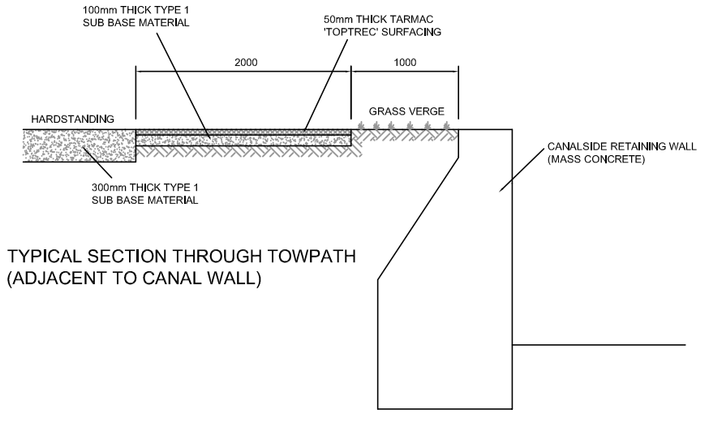

TYPICAL SECTION THROUGH TOWPATH
(ADJACENT TO CANAL WALL)

AMENDMENT DETAILS	By	Chkd	Apvd	Date	No.

DRAWN BY	CHECKED BY	APPROVED BY
S Jones	G Coles	P Storey
Date 1 Feb 2010	Date 1 Feb 2010	Date 1 Feb 2010

ORIGINAL DRAWING SIZE 420 x 594 (A2)

DERBYSHIRE County Council

IAN STEPHENSON
Strategic Director – Environmental Services

DERBYSHIRE CONSULTING ENGINEERS

PROJECT TITLE

CHESTERFIELD CANAL
NEXT NAVIGATION EAST

DRAWING TITLE

SCEMATIC CONSTRUCTION DETAILS
SHOWING TYPICAL CANAL INFRASTRUCTURE
AND CHANNEL PROFILE

DCE Project Reference Number	9213A/20	SCALE
Drawing Number	9213A/20/109	NTS

XREFS:

COMPUTER REFERENCE : K:\Environment-and-Transport\Reclamation\9213a Chesterfield canal\9213_30 Staveley Town Basin\Planning\Planning Application.dwg